Table of Contents / Inhaltsverzeichnis

Exam Winter Semester 2022 3
Only EEE1-relevant Part 3
Full Exam 10

Exam Winter Semester 2022

Additional permitted Aids

- non-programmable calculator,
- formulary (2 DIN A4 pages)

Hits

- The duration of the exam is 60 min.
- Attempts to cheat will lead to exclusion and failure of the exam.
- Withdrawal is no longer possible after these exam has been handed out.
- Please write down intermediate calculations and results on the assignment sheet. (when more space is needed also on the reverse side. In this case: Mark it clearly).
- Always use units in the calculation.
- Use a document-proof, non-red pen.

Only EEE1-relevant Part

This part is only for about 25 minutes !

Exercise E1 Resistance of a Wire by Resistivity
(written test, approx. 6 % of a 60-minute written test, WS2022)

A heating element made of Nichrome wire with a round cross-section of $1.80 ~\rm{mm}$ is used in an electric oven. A power dissipation (= heat flow) of $P=40 ~\rm{W}$ is necessary.
Calculate the current I needed to operate it.
The Nichrome wire has a resistivity of $1.10\cdot 10^{-6} ~\Omega \rm{m}$.
The heating element is $3 ~\rm{m}$ long and has a diameter of $3.57 ~\rm{mm}$.
1. Calculate the resistance R of the heating element.

Solution
\begin{align*} P = U \cdot I = R \cdot I^2 \quad \rightarrow \quad I= \sqrt{\frac{P}{R}} = \sqrt{\frac{40 ~\rm{W}}{0.33 ~\Omega}} \end{align*}

\begin{align*} R &= \rho \cdot \frac{l}{A} && | \text{with } A = r^2 \cdot \pi = \frac{1}{4} d^2 \cdot \pi \\ R &= \rho \cdot \frac{4 \cdot l}{d^2 \cdot \pi} && \\ R &= 1.10\cdot 10^{-6} ~\Omega \rm{m} \cdot \frac{4 \cdot 3~\rm{m}}{(3.57\cdot 10^{-3}~\rm{m})^2 \cdot \pi} && \\ \end{align*}

Result
$R=5.10 ~\Omega$

Exercise E2 Temperature-dependent Resistance
(written test, approx. 6 % of a 60-minute written test, WS2022)

1. Calculate the resistance of the thermistor at $-40 ~°\rm{C}$.
2. Calculate the power in the resistor $P=U\cdot I=R\cdot I^2=U^2/R$ for the circuit and explain why the power decreases with increasing temperature.
3. Additionally, explain why the temperature sensitive resistor of the circuit should be constructed so that the fold resistance decreases with increasing temperature.

A thermistor has a resistance of $10 ~\rm{k}\Omega$ at $+25 ~°\rm{C}$.
Its temperature coefficients are: $\alpha=0.01 ~{{1}\over{\rm{K}}}$ and $\beta=71 \cdot 10^{-6}~{{1}\over{\rm{K}^2}}$
The temperature inside the refrigeration system can reach down to $-40 ~°\rm{C}$.

Result

$$\begin{align*} R &= 6.5 ~\rm{k}\Omega \\ \end{align*}$$

Solution

The power in the resistor $P=U\cdot I=R\cdot I^2=U^2/R$ is the power of the circuit and generally $R(T)$ is therefore, a quantity proportional to the heat flow up the refrigeration system.
Therefore, with constant U and increasing R the power decreases. Ten times more resistance decreases the heat flow to one-tenth.

$$\begin{align*} R &= R_0 \cdot (1 + \alpha \cdot \Delta T + \beta \cdot \Delta T^2) && \text{with } \Delta T = T_{\rm end} - T_{\rm start}\\ R &= 10 ~\rm{k}\Omega \cdot \left(1 + 0.01 ~{{1}\over{\rm{K}}} \cdot (-40~°\rm{C} - 25~°\rm{C}) + 71 \cdot 10^{-6}~{{1}\over{\rm{K}^2}} \cdot (-40~°\rm{C} - 25~°\rm{C})^2 \right) \\ \end{align*}$$

Exercise E3 Pure Resistor Network Simplification
(written test, approx. 13 % of a 60-minute written test, WS2022)

1. The following circuit with $R_1=200 ~\Omega$, $R_2=R_3=100 ~\Omega$ and $U=15 ~\rm V$ is given.
2. Calculate the equivalent resistance between $\rm A$ and $\rm B$.

Result

$$\begin{align*} R_{\rm eq} &= 132.8 ~\Omega \\ \end{align*}$$

Solution

Now a wye-delta transformation is necessary.

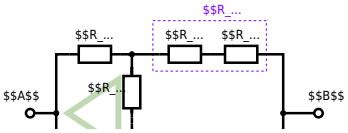

Since $R_2=R_3$ and based on the equations for the transformation, the transformed R_Y is given as: \begin{align*} R_{Y} &= {{R_2 \cdot R_2}\over{R_2 + R_2 + R_2}} \\ &= {{(100 ~\Omega)^2}\over{3 \cdot 100 ~\Omega}} \\ &= {{1}\over{3}} \cdot 100 ~\Omega = 33.33 ~\Omega \end{align*}

The equivalent resistor is given by a parallel configuration of resistors in series: \begin{align*} R_{\rm eq} &= R_Y + (R_Y + R_1 + R_1)||(R_Y + R_2)\\ R_{\rm eq} &= 33.33 ~\Omega + (33.33 ~\Omega + 400 ~\Omega)||(33.33 ~\Omega + 100 ~\Omega)\\ \end{align*}

1. The switch shall now be open. Calculate the equivalent resistance $R_{\rm eq}$ between $\rm A$ and $\rm B$.

Solution

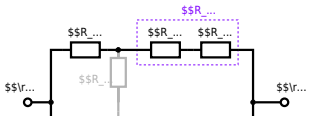

The equivalent resistor is given by a parallel configuration of resistors in series:
\begin{align*} R_{\rm eq} &= (R_2 + R_1 + R_1)||(R_2 + R_2)\\ R_{\rm eq} &= (100 ~\Omega + 200 ~\Omega + 200 ~\Omega)&&||(100 ~\Omega + 100 ~\Omega) &&\\ R_{\rm eq} &= (500 ~\Omega)&&||(200 ~\Omega)&&\\ R_{\rm eq} &= {{500 ~\Omega \cdot 200 ~\Omega }\over{500 ~\Omega + 200 ~\Omega}}&&\\ \end{align*}

Exercise E4 Equivalent linear Source
(written test, approx. 14 % of a 60-minute written test, WS2022)

The circuit in the following has to be simplified.
Result

\begin{align*} U_{\rm s} &= U_{\rm AB} &&= 4.5 ~\rm{V}\\ R_{\rm i} &= R_{\rm AB} &&= 6 ~\Omega \end{align*}

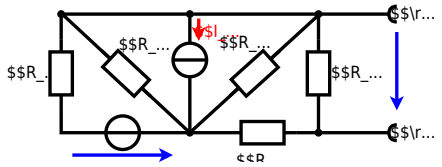

Calculated the internal resistance $R_\rm i$ and the source voltage $U_\rm s$ of an equivalent linear voltage source on the connectors $\rm A$ and $\rm B$. \begin{align*} R_1=5.0 ~\Omega, && U_2=6.0 ~\rm{V}, && R_3= 10 ~\Omega, \\ I_4=4.2 ~\rm{A}, && R_5=10 ~\Omega , && R_6=7.5 ~\Omega, \\ R_7=15 ~\Omega && && \end{align*} Use equivalent sources in order to simplify the circuit!

Solution

The best thing is to re-think the wiring like rubber bands and adjust them:

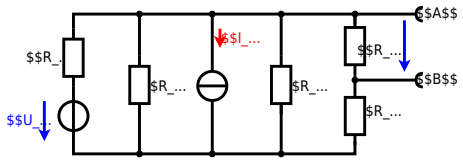

The linear voltage source of U_2 and R_1 can be transformed into a current source $I_2={{U_2}\over{R_1}}$ and R_1:

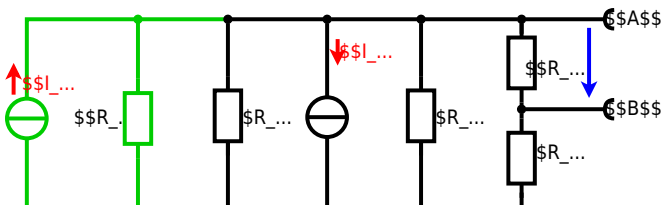

Now a lot of them can be combined. The resistors R_1, R_3, R_5 are in parallel, like also I_2 and I_4: \begin{align*} R_{135} &= R_1||R_3||R_5\\ I_{24} &= I_2 - I_4 = {{U_2}\over{R_1}} - I_4 \end{align*} The resulting circuit can again be transformed:

Here, the U_{24} is calculated by I_{24} as the following: \begin{align*} U_{24}

&= R_{135} \cdot I_{24} \\ &= ({{U_2}\over{R_1}} - I_4) \cdot R_1||R_3||R_5 \end{align*}

On the right side of the last circuit, there is a voltage divider given by R_{135}, R_6, and R_7.
Therefore the voltage between A and B is given as: \begin{align*} U_{\rm AB} &= U_{24} \cdot {{R_7}\over{R_6 + R_7 + R_1||R_3||R_5}} \\ &= ({{U_2}\over{R_1}} - I_4) \cdot {{R_7 \cdot R_1||R_3||R_5}\over{R_6 + R_7 + R_1||R_3||R_5}} \\ \end{align*}

For the internal resistance R_i the ideal voltage source is substituted by its resistance ($=0\Omega$, so a short-circuit): \begin{align*} R_{\rm AB} &= R_7 || (R_6 + R_1||R_3||R_5) \\ \end{align*}

with $R_1||R_3||R_5 = 5 ~\Omega || 10 ~\Omega || 10 ~\Omega = 5 ~\Omega || 5 ~\Omega = 2.5 ~\Omega$:

\begin{align*} U_{\rm AB} &= ({{6.0 ~\rm{V}}\over{5.0 ~\Omega}} - 4.2 ~\Omega) \cdot {{15 ~\Omega \cdot 2.5 ~\Omega}\over{7.5 ~\Omega + 15 ~\Omega + 2.5 ~\Omega}} \\ R_{\rm AB} &= 15 ~\Omega|| (7.5 ~\Omega + 2.5 ~\Omega) \\ \end{align*}

Full Exam

These is the full exam

Full exam

Exercise E1 Resistance of a Wire by Resistivity
(written test, approx. 6 % of a 60-minute written test, WS2022)

A heating element made of Nichrome wire with a cross-section of $1.0 ~\rm{mm}^2$ is used in an electric oven.
To achieve a power dissipation (= heat flow) of $P=40 ~\rm{W}$ is necessary.
Calculate the current I needed to operate it.
The Nichrome wire has a resistivity of $1.10\cdot 10^{-6} ~\Omega \rm{m}$.
The heating element is $3 ~\rm{m}$ long and has a diameter of $3.57 ~\rm{mm}$.
1. Calculate the resistance R of the heating element.

Result
Nichrome is a nickel-chromium alloy for heating elements.

Solution
\begin{align*} R &= 1.10 \cdot 10^{-6} ~\Omega \rm{m} \end{align*}

Solution
\begin{align*} P = U \cdot I = R \cdot I^2 \quad \rightarrow \quad I= \sqrt{\frac{P}{R}} = \sqrt{\frac{40 ~\rm{W}}{0.33 ~\Omega}} \end{align*}

\begin{align*} R &= \rho \cdot \frac{l}{A} && | \text{with } A = r^2 \cdot \pi =

\frac{1}{4} d^2 \cdot \pi \\ R &= \rho \cdot \frac{4 \cdot l}{d^2 \cdot \pi} && \\ R &= 1.10\cdot 10^{-6} ~\Omega \rm{m} \cdot \frac{4 \cdot 3~\rm{m}}{(3.57\cdot 10^{-3}~\rm{m})^2 \cdot \pi} && \\ \end{align*}

electrical_engineering_and_electronics:task_rj0r6j4apumukrj6_with_calculation
resistivity, power, exam ee1 ws2022

Exercise E2 Temperature-dependent Resistance
(written test, approx. 6 % of a 60-minute written test, WS2022)

1. Calculate the resistance of the thermistor at $-40 ~°\rm{C}$.

Result

$$R &= 6.5 ~\rm{k}\Omega \\ \end{align*}$$

Solution

The power of the resistor $P = U \cdot I = R \cdot I^2 = {{U^2}\over{R}}$ is dependent on the resistance.
Therefore, with constant U and increasing R the power decreases. Ten times more resistance decreases the heat flow to one-tenth.

2. Explain why the temperature inside the refrigeration system can reach down to $-40 ~°\rm{C}$.

Result

The temperature inside the refrigeration system can reach down to $-40 ~°\rm{C}$.

3. Calculate the resistance of the thermistor at $-40 ~°\rm{C}$.

Result

The resistor of the circuit $R = {{U^2}\over{P}}$ is equivalent to the heat flow.
Therefore, a resistive heater might heat up the refrigeration system.

Solution

\begin{align*} R &= R_0 \cdot (1 + \alpha \cdot \Delta T + \beta \cdot \Delta T^2) && | \text{with } \Delta T = T_{\rm end} - T_{\rm start}\\ R &= 10 ~\rm{k}\Omega \cdot \left(1 + 0.01 ~{{1}\over{\rm{K}}} \cdot (-40~°\rm{C} - 25~°\rm{C}) + 71 \cdot 10^{-6}~{{1}\over{\rm{K}^2}} \cdot (-40~°\rm{C} - 25~°\rm{C})^2 \right) \\ \end{align*}

electrical_engineering_and_electronics:task_70jjg4yzznocarsq_with_calculation
temperature dependent resistance, power, heat, exam ee1 ws2022

Exercise E3 Pure Resistor Network Simplification
(written test, approx. 13 % of a 60-minute written test, WS2022)

1. The following circuit with $R_1=200 ~\Omega$, $R_2=R_3=150 ~\Omega$ and $U_0=12 ~\rm{V}$ is given. Calculate the equivalent resistance between $\rm A$ and $\rm B$.

Result

$$R_{\rm eq} &= 132.8 ~\Omega \\ \end{align*}$$

Solution

Now a wye-delta transformation is necessary.

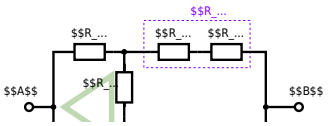

Since $R_2=R_3$ and based on the equations for the transformation, the transformed R_Y is given as: \begin{align*} R_{Y} &= {{R_2 \cdot R_2}\over{R_2 + R_2 + R_2}} \\ &= {{(100 ~\Omega)^2}\over{3 \cdot 100 ~\Omega}} \\ &= {{1}\over{3}} \cdot 100 ~\Omega = 33.33 ~\Omega \end{align*}

The equivalent resistor is given by a parallel configuration of resistors in series: \begin{align*} R_{\rm eq} &= R_Y + (R_Y + R_1 + R_1)||(R_Y + R_2)\\ R_{\rm eq} &= 33.33 ~\Omega + (33.33 ~\Omega + 400 ~\Omega)||(33.33 ~\Omega + 100 ~\Omega)\\ \end{align*}

1. The switch shall now be open. Calculate the equivalent resistance $R_{\rm eq}$ between $\rm A$ and $\rm B$.

Solution

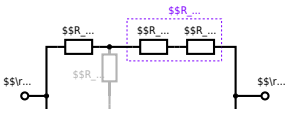

The equivalent resistor is given by a parallel configuration of resistors in series: \begin{align*} R_{\rm eq} &= (R_2 + R_1 + R_1)||(R_2 + R_2)\\ R_{\rm eq} &= (100 ~\Omega + 200 ~\Omega + 200 ~\Omega)&&||(100 ~\Omega + 100 ~\Omega) &&\\ R_{\rm eq} &= (500 ~\Omega)&&||(200 ~\Omega)&&\\ R_{\rm eq} &= {{500 ~\Omega \cdot 200 ~\Omega }\over{500 ~\Omega + 200 ~\Omega}}&&\\ \end{align*}

electrical_engineering_and_electronics:task_x357drkaqv84jnsc_with_calculation network simplification, exam ee1 ws2022

Exercise E4 Equivalent linear Source
(written test, approx. 14 % of a 60-minute written test, WS2022)

The circuit in the following has to be simplified.
Result

\begin{align*} U_{\rm s} &= U_{\rm AB} &&= 4.5 ~\rm{V}\\ R_{\rm i} &= R_{\rm AB} &&= 6 ~\Omega \end{align*}

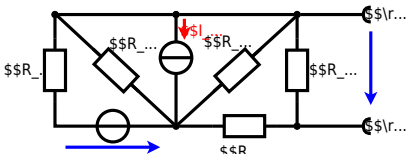

Calculated the internal resistance $R_\rm i$ and the source voltage $U_\rm s$ of an equivalent linear voltage source on the connectors $\rm A$ and $\rm B$. \begin{align*} R_1=5.0 ~\Omega, && U_2=6.0 ~\rm{V}, && R_3= 10 ~\Omega, \\ I_4=4.2 ~\rm{A}, && R_5=10 ~\Omega , && R_6=7.5 ~\Omega, \\ R_7=15 ~\Omega && && \end{align*} Use equivalent sources in order to simplify the circuit!

Solution

The best thing is to re-think the wiring like rubber bands and adjust them:

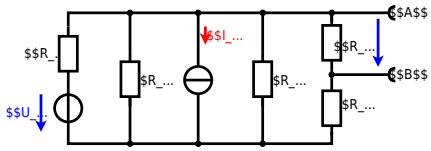

The linear voltage source of U_2 and R_1 can be transformed into a current source $I_2={{U_2}\over{R_1}}$ and R_1:

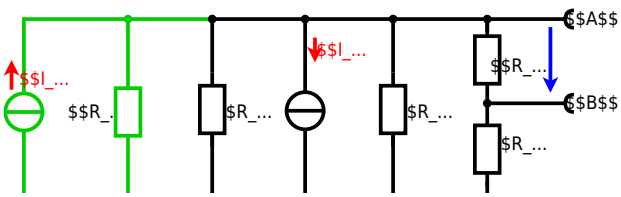

Now a lot of them can be combined. The resistors R_1, R_3, R_5 are in

parallel, like also I_2 and I_4: \begin{align*} R_{135} &= R_1||R_3||R_5\\ I_{24} &= I_2 - I_4 = {{U_2}\over{R_1}} - I_4 \end{align*} The resulting circuit can again be transformed:

Here, the U_{24} is calculated by I_{24} as the following: \begin{align*} U_{24} &= R_{135} \cdot I_{24} \\ &= ({{U_2}\over{R_1}} - I_4) \cdot R_1||R_3||R_5 \end{align*}

On the right side of the last circuit, there is a voltage divider given by R_{135}, R_6, and R_7.
Therefore the voltage between A and B is given as: \begin{align*} U_{\rm AB} &= U_{24} \cdot {{R_7}\over{R_6 + R_7 + R_1||R_3||R_5}} \\ &= ({{U_2}\over{R_1}} - I_4) \cdot {{R_7 \cdot R_1||R_3||R_5}\over{R_6 + R_7 + R_1||R_3||R_5}} \\ \end{align*}

For the internal resistance R_i the ideal voltage source is substituted by its resistance ($=0\Omega$, so a short-circuit): \begin{align*} R_{\rm AB} &= R_7 || (R_6 + R_1||R_3||R_5) \\ \end{align*}

with $R_1||R_3||R_5 = 5 ~\Omega || 10 ~\Omega || 10 ~\Omega = 5 ~\Omega || 5 ~\Omega = 2.5 ~\Omega$:

\begin{align*} U_{\rm AB} &= ({{6.0 ~\rm{V}}\over{5.0 ~\Omega}} - 4.2 ~\Omega) \cdot {{15 ~\Omega \cdot 2.5 ~\Omega}\over{7.5 ~\Omega + 15 ~\Omega + 2.5 ~\Omega}} \\ R_{\rm AB} &= 15 ~\Omega|| (7.5 ~\Omega + 2.5 ~\Omega) \\ \end{align*}

electrical_engineering_and_electronics:task_6tqttque1e2nf2c7_with_calculation
dc network analysis, pure resistor network simplification, delta wye transformation, exam ee1 ws2022

Exercise E5 Charging Capacitors
(written test, approx. 16 % of a 60-minute written test, WS2022)

The switch S_2 is open). The voltage across the capacitor is again $0 ~\rm{V}$ at the moment $t_0=0 ~\rm{s}$ when the switch S_1 is closed. Calculate the voltage $u_c (t_2)$ across the capacitor at $t_2=1 ~\rm{ms}$ after closing the switch.

Hint: To solve this, first create an equivalent linear voltage source from U, R_1, and $R_\rm B$.

Solution

On an alternative view, one can try to create an equivalent linear voltage source again. Then, the internal resistance is given by substituting the ideal voltage source is again short-circuiting R_2.

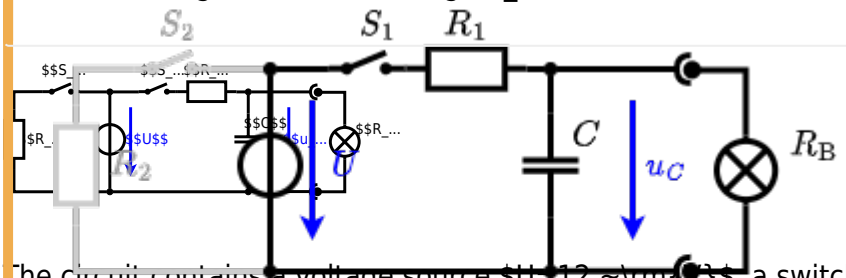

The circuit contains a voltage source $U=12 ~\rm{V}$, a switch S_1, a resistor of $R_1=20 ~\Omega$ and a capacitor of $C=100 ~\rm{µF}$.
The switch S_2 to an additional consumer R_2 will be considered to be open for the first tasks. At the moment $t_0=0 ~\rm{s}$ the switch S_1 is closed, the voltage across the capacitor is $u_c (t_0)=0 ~\rm{V}$.

1. First do not consider the light bulb – it is not connected to the RC circuit. Calculate the point of time t_1 when $u_c (t_1)=0.5\cdot U$.

Solution

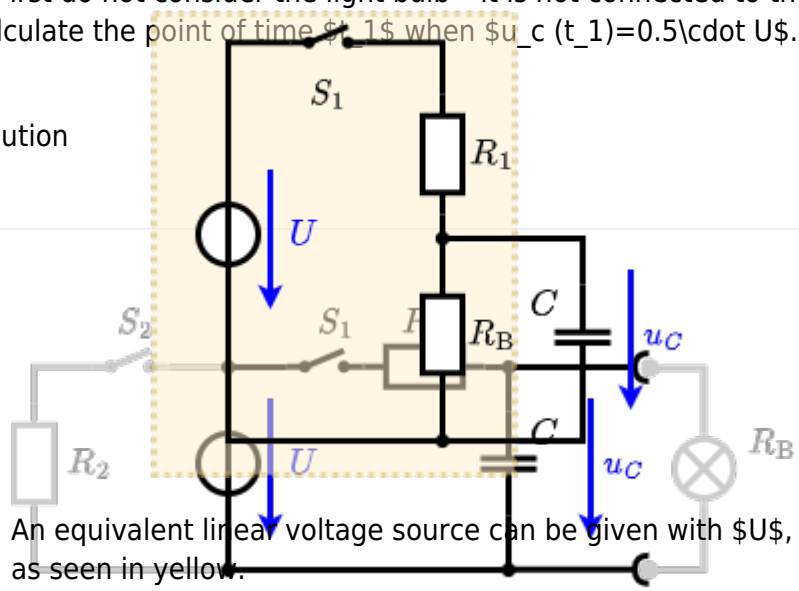

An equivalent linear voltage source can be given with U, R_1, and $R_\rm B$ as seen in yellow.
Therefore, the voltage of the equivalent linear voltage source is $U_s = U \cdot {{R_\rm B}\over{R_1 + R_\rm B}} = 1/2 \cdot U$ The internal resistance is given by substituting the ideal voltage source with its resistance $=0 ~\Omega$, short-circuit. $R_i &= R_1 || R_\rm B \\ &= 10 ~\Omega$ It has to be rearranged to t $(1- e^{t/\tau}) &= 0.5 \\ e^{t/\tau} &= 0.5 \\ t/\tau &= ln(0.5) \\ t &= \tau \cdot ln(0.5) \\ t &= R_1 \cdot C \cdot ln(0.5) \\ t &= 2 ms$ $u_c(t_2) &= U_s \cdot (1- e^{t_2/(R_i\cdot C)}) \\ &=

The following formula describes the time course of $u_C(t)$ which has to be $u_c (t_1)=0.5\cdot U$: $u_c (t) = U \cdot (1-e^{-t/\tau}) = 0.5\cdot U$

{{1}\over{2}} \cdot U \cdot (1- e^{1~\rm{ms}/(10 ~\Omega \cdot 100 ~\rm{µF})}) \end{align*}

electrical_engineering_and_electronics:task_tb6pi8dgh0m2e2pw_with_calculation
charging capacitors, dc network analysis, pure resistor network simplification, delta wye transformation, exam ee1 ws2022

Exercise E6 Analyzing complex Impedances
(written test, approx. 14 % of a 60-minute written test, WS2022)

1. Calculate the physical values of the two components.
2. Calculate the complex current $\underline{I}$ and the complex voltage $\underline{U}$ for the two components.
3. Draw the phasor diagram.

Result

After analysis, the following information for the impedance has been extracted (in the right-angle form):

$$\underline{Z} = \left({{2}\over{3+4{\rm j}}}+5{\rm j} \right) \Omega$$

Solution

1. Calculate the physical values of the two components.

$$\begin{align*} C &= 103 ~\rm{µF} \\ R &= 0.24 ~\Omega \end{align*}$$

Solution

$$\begin{align*} \underline{I} &= {{\underline{U}}\over{\underline{Z}}} \\ &= {{50 ~\rm{V}}\over{ 0.24 ~\Omega + {\rm j} \cdot 4.68 ~\Omega }} \cdot {{ 0.24 ~\Omega - {\rm j} \cdot 4.68 ~\Omega }\over{ 0.24 ~\Omega - {\rm j} \cdot 4.68 ~\Omega }} \\ &= {{50 ~\rm{V}}\over{ 0.24 ~\Omega - {\rm j} \cdot 4.68 ~\Omega }} \cdot {{ 0.24 ~\Omega - {\rm j} \cdot 4.68 ~\Omega }\over{ 0.24 ~\Omega - {\rm j} \cdot 4.68 ~\Omega }} \\ &= \left({{2}\over{3+4{\rm j}}}+5{\rm j} \right) ~\Omega \\ &= \left({{2}\over{9+16}}\cdot (3-4{\rm j}) + 5{\rm j} \right) ~\Omega \\ &= \left(0.24 - 0.32{\rm j} + 5{\rm j} \right) ~\Omega \\ &= 0.24 - {\rm j} \cdot 4.68 ~\Omega \end{align*}$$

The absolute value $|\underline{I}|$ can be calculated as $\begin{align*} I &= {|\underline{U}|}\over{|\underline{Z}|}} \\ &= {{50 ~\rm{V}}\over{| 0.24 ~\Omega + {\rm j} \cdot 4.68 ~\Omega |}} \\ &= {{50 ~\rm{V}}\over{\sqrt{ (0.24 ~\Omega)^2 + (4.68 ~\Omega)^2 }}} \\ &= {{50 ~\rm{V}}\over{4.69 ~\Omega}} \\ &= 10.67 ~\rm{A} \end{align*}$

With the complex part comes the physical values $\begin{align*} X_L &= \omega L \\ L &= {{X_L}\over{2\pi \cdot f}} \\ &= {{4.68 ~\Omega}\over{2\pi \cdot 300 ~\rm{Hz}}} \\ \end{align*}$

The phase φ_i can be calculated as $\begin{align*} \varphi_i &= \arctan \left({{\Im()}\over{\Re()}} \right) \\ &= \arctan \left({{-4.68 ~\Omega}\over{0.24 ~\Omega}} \right) \\ \end{align*}$

electrical_engineering_and_electronics:task_jti0uzudcmg4u22t_with_calculation
complex impedance, exam ee1 ws2022

Exercise E7 Impedances at different Frequencies
(written test, approx. 18 % of a 60-minute written test, WS2022)

2. A RC parallel circuit with $R_2=24.7 ~\Omega$ and $C_2=47 ~{\rm nF}$ is connected in series with a coil of $L_{3S}=1.3 ~{\rm mH}$ and $R_{3S}=20 ~\Omega$ with $f_2=450 ~{\rm kHz}$ generates a current of $I_{3R}=60 ~{\rm mA}$.
Result: $f_3=200 ~{\rm kHz}$
1. A resistor R_1 shall have the same absolute value of the impedance as a capacitor $C_1=40 ~{\rm nF}$ at $f_1=4 ~{\rm MHz}$.
Result: $R_1=1.00 ~\Omega$
2. A resistor R_2 shall have the same absolute value of the impedance as a coil of $L_2=1.3 ~{\rm mH}$ and $R_{2L}=10 ~\Omega$ at $f_2=450 ~{\rm kHz}$ and a current of $I_{2R}=60 ~{\rm mA}$.
Result: $R_2=10.0 ~\Omega$
3. A resistor R_3 shall have the same absolute value of the impedance as a capacitor $C_3=47 ~{\rm nF}$ and a coil of $L_{3S}=1.3 ~{\rm mH}$ and $R_{3S}=20 ~\Omega$ with $f_3=200 ~{\rm kHz}$ generates a current of $I_{3R}=60 ~{\rm mA}$.
Result: $R_3=7.00 ~\Omega$

Solution

Solution

Solution

A series circuit means that the current is constant on every component.
The equivalent impedance for R and L combined is given by \begin{align*} {{\underline{U}}\over{\underline{I}}} &= R + \underline{X}_{L} \\ &= R_2 + j\cdot 2\pi \cdot f \cdot L \\ &= R_2 + j\cdot 2\pi \cdot 450 ~{\rm kHz} \cdot 1.3 ~{\rm mH} \\ &= R_2 + j\cdot 3.7 ~\Omega \end{align*}
Parallel circuit means that the voltage is the same on R_3 and C_3 (It has to, since R_3 is perpendicular to C_3 top).
Therefore, the resulting current of the parallel circuit is given as: \begin{align*} \underline{I}_{3} &= \underline{I}_{3R} + \underline{I}_{3C} \\ |\underline{I}_{3}|^2 &= |\underline{I}_{3R}|^2 + |\underline{I}_{3C}|^2 \\ &= \sqrt{|\underline{I}_{3R}|^2 + |\underline{I}_{3C}|^2} \end{align*}
Back to the first formula: \begin{align*} R_3 \cdot {I}_{3R} &= {X}_{3C} \cdot {I}_{3C} \\ R_3 &= {X}_{3C} \cdot {{{I}_{3C}}\over{{I}_{3R}}} \\ &= {{1}\over{2\pi \cdot f \cdot C_3}} \cdot {{\sqrt{|{I}_{3}|^2 - |{I}_{3R}|^2}}\over{{I}_{3R}}} \\ \end{align*}

electrical_engineering_and_electronics:task_pdkggtyexxy1ktu3_with_calculation
complex impedance, exam ee1 ws2022

Exercise E8 Complex Impedance Circuit
(written test, approx. 15 % of a 60-minute written test, WS2022)

1. Draw the circuit diagram of the given circuit.
Label all components, voltages, and currents.
2. Calculate the complex impedance $\underline{Z}$ and the complex admittance $\underline{Y}$ and the impedance Z and the admittance Y of the circuit.
Result: $\underline{Z} = 19.8 ~\Omega$
3. Calculate the current $\underline{I}$ and the current I and the phase angle φ between the voltage and the current.
Result: $I = 0.27 ~{\rm A}$ and $\varphi = 48.2 ~\Omega$
4. Calculate the current $\underline{I}$ and the current I and the phase angle φ between the voltage and the current if the voltage source $u(t) = 3.0 ~{\rm V} \cdot \sin(2\pi \cdot 15 ~{\rm kHz} \cdot t)$ with a scaling factor and a resistor of $10 ~\Omega$.
Result: $I = 0.27 ~{\rm A}$ and $\varphi = 48.2 ~\Omega$

Solution

Solution

Result

Draw the circuit diagram of the given circuit.

Label all components, voltages, and currents.

Result

With $f = {{1}\over{\sqrt{2}}} \cdot \hat{I}$: \begin{align*} I &= {{1}\over{\sqrt{2}}}\cdot {{\hat{U}}\over{Z}} \\ &=

$$\begin{align*} I &= {{13.0 ~{\rm V}}\over{19.28 ~\Omega}} \\ \end{align*}$$

$$\begin{align*} Z_C &= {{1}\over{2\pi \cdot f \cdot C}}\\ &= {{1}\over{2\pi \cdot 15 ~{\rm kHz} \cdot 330 ~{\rm µH}}}\\ \end{align*}$$

$$\begin{align*} \underline{Z} &= R + \underline{Z}_L + \underline{Z}_C \\ &= R + j \cdot {Z}_L - j \cdot {Z}_C \\ &= R + j \cdot ({Z}_L - {Z}_C) \\ |\underline{Z}| &= \sqrt{R^2 + (\underline{Z}_L - \underline{Z}_C)^2 }\\ \end{align*}$$

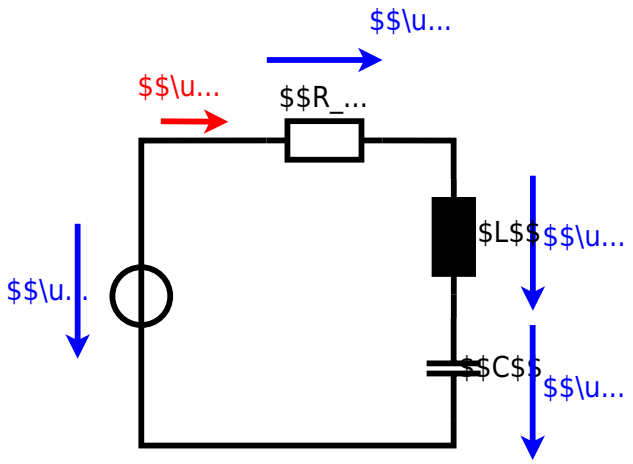
$$\u...
$$\u...
$$R_...
$L$$
$$\u...
$$\u...
$$C$$
$$\u...

electrical_engineering_and_electronics:task_kricv9fh7haauo6q_with_calculation complex impedance, exam ee1 ws2022

From:
https://wiki.mexle.org/ - **MEXLE Wiki**

Permanent link:
https://wiki.mexle.org/electrical_engineering_and_electronics_1/ws2022_exam

Last update: **2026/01/12 00:24**