Exam Winter Semester 2022

Student Group

First Name	Surname	Matrikel Nr.

Table of Contents

Exam Winter Semester 2022 2
Additional permitted Aids 2
Hits 2
Only EEE1-relevant Part 2
Exercise E1 Resistance of a Wire by Resistivity (written test, approx. 6 % of a 60-minute written test, WS2022) 2
Exercise E3 Temperature-dependent Resistance (written test, approx. 6 % of a 60-minute written test, WS2022) 3
Exercise E1 Pure Resistor Network Simplification (written test, approx. 13 % of a 60-minute written test, WS2022) 3
Exercise E2 Equivalent linear Source (written test, approx. 14 % of a 60-minute written test, WS2022) 5
Full Exam 9
Exercise E1 Resistance of a Wire by Resistivity (written test, approx. 6 % of a 60-minute written test, WS2022) 9
Exercise E3 Temperature-dependent Resistance (written test, approx. 6 % of a 60-minute written test, WS2022) 10
Exercise E1 Pure Resistor Network Simplification (written test, approx. 13 % of a 60-minute written test, WS2022) 10
Exercise E2 Equivalent linear Source (written test, approx. 14 % of a 60-minute written test, WS2022) 12
Exercise E1 Charging Capacitors (written test, approx. 16 % of a 60-minute written test, WS2022) 16
Exercise E1 Analyzing complex Impedances (written test, approx. 14 % of a 60-minute written test, WS2022) 17
Exercise E9 Impedances at different Frequencies (written test, approx. 18 % of a 60-minute written test, WS2022) 17
Exercise E1 Complex Impedance Circuit (written test, approx. 15 % of a 60-minute written test, WS2022) 18

Exam Winter Semester 2022

Additional permitted Aids

- non-programmable calculator,
- formulary (2 DIN A4 pages)

Hits

- The duration of the exam is 60 min.
- Attempts to cheat will lead to exclusion and failure of the exam.
- Withdrawal is no longer possible after these exam has been handed out.
- Please write down intermediate calculations and results on the assignment sheet. (when more space is needed also on the reverse side. In this case: Mark it clearly).
- Always use units in the calculation.
- Use a document-proof, non-red pen.

Only EEE1-relevant Part

This part is only for about 25 minutes !

Exercise E1 Resistance of a Wire by Resistivity
(written test, approx. 6 % of a 60-minute written test, WS2022)

A heating element made of a Nichrome wire with a round cross-section is used in an electric oven. A power dissipation (= heat flow) of $P=40 ~\rm{W}$ is necessary.
Calculate the current I needed to operate it.
The Nichrome wire has a resistivity of $1.10\cdot 10^{-6} ~\Omega \rm{m}$.
The heating element is $3 ~\rm{m}$ long and has a diameter of $3.57 ~\rm{mm}$.
1. Calculate the resistance R of the heating element.

Result

Solution

\begin{align*} R &= 1.10 \cdot 10^{-6} ~\Omega \rm{m} \end{align*}

Solution

\begin{align*} P = U \cdot I = R \cdot I^2 \quad \rightarrow \quad I= \sqrt{\frac{P}{R}} = \sqrt{\frac{40 ~\rm{W}}{0.33 ~\Omega}} \end{align*}

\begin{align*} R &= \rho \cdot \frac{l}{A} && | \text{with } A = r^2 \cdot \pi = \frac{1}{4} d^2 \cdot \pi \\ R &= \rho \cdot \frac{4 \cdot l}{d^2 \cdot \pi} && \\ R &= 1.10\cdot 10^{-6} ~\Omega \rm{m} \cdot \frac{4 \cdot 3~\rm{m}}{(3.57\cdot 10^{-3}~\rm{m})^2 \cdot \pi} && \\ \end{align*}

Exercise E3 Temperature-dependent Resistance
(written test, approx. 6 % of a 60-minute written test, WS2022)

A thermistor is used in a temperature sensor in a refrigeration system. The thermistor has a resistance of $10 ~\rm{k}\Omega$ at $+25 ~°\rm{C}$.
Its temperature coefficients are: $\alpha=0.01 ~{{1}\over{\rm{K}}}$ and $\beta=71 \cdot 10^{-6}~{{1}\over{\rm{K}^2}}$

The temperature inside the refrigeration system can reach down to $-40 ~°\rm{C}$.

1. Calculate the resistance of the thermistor at $-40 ~°\rm{C}$.

2. Additionally, explain a temperature sensor in a refrigeration system. Therefore, a resistance of $10 ~\rm{k}\Omega$ at $+25 ~°\rm{C}$.

Result

\begin{align*} R &= 6.5 ~\rm{k}\Omega \\ \end{align*}

Result

Solution

The power of the resistor $P = U \cdot I = R \cdot I^2 = {{U^2}\over{R}}$ is equivalent to the heat flow.

Therefore, with constant U and increasing R the power decreases. Ten times more resistance decreases the heat flow to one-tenth.

\begin{align*} R &= R_0 \cdot (1 + \alpha \cdot \Delta T + \beta \cdot \Delta T^2) && | \text{with } \Delta T = T_{\rm end} - T_{\rm start}\\ R &= 10 ~\rm{k}\Omega \cdot \left(1 + 0.01 ~{{1}\over{\rm{K}}} \cdot (-40~°\rm{C} - 25~°\rm{C}) + 71 \cdot 10^{-6}~{{1}\over{\rm{K}^2}} \cdot (-40~°\rm{C} - 25~°\rm{C})^2 \right) \\ \end{align*}

Exercise E1 Pure Resistor Network Simplification
(written test, approx. 13 % of a 60-minute written test, WS2022)

The following circuit with $R_1=200 ~\Omega$, $R_2=R_3=100 ~\Omega$ and the switch S is given.

2. Calculate the equivalent resistance $R_{\rm eq}$ between $\rm A$ and $\rm B$.

Result

\begin{align*} R_{\rm eq} &= 142.8 ~\Omega \\ \end{align*}

Solution

Now a wye-delta transformation is necessary.

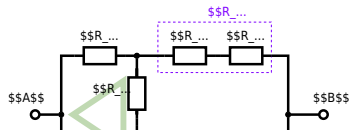

Since $R_2=R_3$ and based on the equations for the transformation, the transformed R_Y is given as: \begin{align*} R_{Y} &= {{R_2 \cdot R_2}\over{R_2 + R_2 + R_2}} \\ &= {{(100 ~\Omega)^2}\over{3 \cdot 100 ~\Omega}} \\ &= {{1}\over{3}} \cdot 100 ~\Omega = 33.33 ~\Omega \end{align*}

The equivalent resistor is given by a parallel configuration of resistors in series: \begin{align*} R_{\rm eq} &= R_Y + (R_Y + R_1 + R_1)||(R_Y + R_2)\\ R_{\rm eq} &= 33.33 ~\Omega + (33.33 ~\Omega + 400 ~\Omega)||(33.33 ~\Omega + 100 ~\Omega)\\ \end{align*}

1. The switch shall now be open. Calculate the equivalent resistance $R_{\rm eq}$ between $\rm A$ and $\rm B$.

Solution

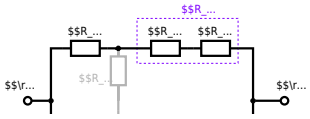

The equivalent resistor is given by a parallel configuration of resistors in series:
\begin{align*} R_{\rm eq} &= (R_2 + R_1 + R_1)||(R_2 + R_2)\\ R_{\rm eq} &= (100 ~\Omega + 200 ~\Omega + 200 ~\Omega)&&||(100 ~\Omega + 100 ~\Omega) &&\\ R_{\rm eq} &= (500 ~\Omega)&&||(200 ~\Omega)&&\\ R_{\rm eq} &= {{500 ~\Omega \cdot 200 ~\Omega }\over{500 ~\Omega + 200 ~\Omega}}&&\\ \end{align*}

Exercise E2 Equivalent linear Source
(written test, approx. 14 % of a 60-minute written test, WS2022)

The circuit in the following has to be simplified.
Result

\begin{align*} U_{\rm s} &= U_{\rm AB} &&= 4.5 ~\rm{V}\\ R_{\rm i} &= R_{\rm AB} &&= 6 ~\Omega \end{align*}

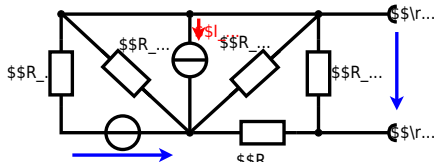

Calculated the internal resistance $R_\rm i$ and the source voltage $U_\rm s$ of an equivalent linear voltage source on the connectors $\rm A$ and $\rm B$. \begin{align*} R_1=5.0 ~\Omega, && U_2=6.0 ~\rm{V}, && R_3= 10 ~\Omega, \\ I_4=4.2 ~\rm{A}, && R_5=10 ~\Omega , && R_6=7.5 ~\Omega, \\ R_7=15 ~\Omega && && \end{align*} Use equivalent sources in order to simplify the circuit!

Solution

The best thing is to re-think the wiring like rubber bands and adjust them:

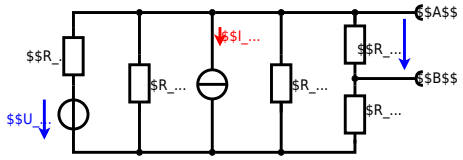

The linear voltage source of U_2 and R_1 can be transformed into a current source $I_2={{U_2}\over{R_1}}$ and R_1:

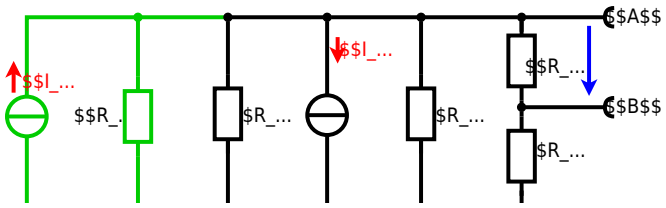

Now a lot of them can be combined. The resistors R_1, R_3, R_5 are in parallel, like also I_2 and I_4: \begin{align*} R_{135} &= R_1||R_3||R_5\\ I_{24} &= I_2 - I_4 = {{U_2}\over{R_1}} - I_4 \end{align*} The resulting circuit can again be transformed:

Here, the U_{24} is calculated by I_{24} as the following: \begin{align*} U_{24}

&= R_{135} \cdot I_{24} \\ &= ({{U_2}\over{R_1}} - I_4) \cdot R_1||R_3||R_5 \end{align*}

On the right side of the last circuit, there is a voltage divider given by R_{135}, R_6, and R_7.
Therefore the voltage between A and B is given as: \begin{align*} U_{\rm AB} &= U_{24} \cdot {{R_7}\over{R_6 + R_7 + R_1||R_3||R_5}} \\ &= ({{U_2}\over{R_1}} - I_4) \cdot {{R_7 \cdot R_1||R_3||R_5}\over{R_6 + R_7 + R_1||R_3||R_5}} \\ \end{align*}

For the internal resistance R_i the ideal voltage source is substituted by its resistance ($=0\Omega$, so a short-circuit): \begin{align*} R_{\rm AB} &= R_7 || (R_6 + R_1||R_3||R_5) \\ \end{align*}

with $R_1||R_3||R_5 = 5 ~\Omega || 10 ~\Omega || 10 ~\Omega = 5 ~\Omega || 5 ~\Omega = 2.5 ~\Omega$:

\begin{align*} U_{\rm AB} &= ({{6.0 ~\rm{V}}\over{5.0 ~\Omega}} - 4.2 ~\Omega) \cdot {{15 ~\Omega \cdot 2.5 ~\Omega}\over{7.5 ~\Omega + 15 ~\Omega + 2.5 ~\Omega}} \\ R_{\rm AB} &= 15 ~\Omega|| (7.5 ~\Omega + 2.5 ~\Omega) \\ \end{align*}

Full Exam

These is the full exam

Full exam

Exercise E1 Resistance of a Wire by Resistivity
(written test, approx. 6 % of a 60-minute written test, WS2022)

A heating element is used to heat the water in a coffee machine. For this, a power dissipation (= heat flow) of $P=40 ~\rm{W}$ is necessary.
Nichrome is a commonly used alloy for heating elements.
The Nichrome wire has a resistivity of $1.10\cdot 10^{-6} ~\Omega \rm{m}$.
The heating element is $3 ~\rm{m}$ long and has a diameter of $3.57 ~\rm{mm}$.
1. Calculate the resistance R of the heating element.
2. Calculate the current I needed to operate the heating element.

Solution
\begin{align*} P = U \cdot I = R \cdot I^2 \quad \rightarrow \quad I= \sqrt{\frac{P}{R}} = \sqrt{\frac{40 ~\rm{W}}{0.33 ~\Omega}} \end{align*}

\begin{align*} R &= \rho \cdot \frac{l}{A} && | \text{with } A = r^2 \cdot \pi = \frac{1}{4} d^2 \cdot \pi \\ R &= \rho \cdot \frac{4 \cdot l}{d^2 \cdot \pi} && \\ R &= 1.10\cdot 10^{-6} ~\Omega \rm{m} \cdot \frac{4 \cdot

3~\rm{m}}{(3.57\cdot 10^{-3}~\rm{m})^2 \cdot \pi} && \\ \end{align*}

electrical_engineering_and_electronics:task_rj0r6j4apumukrj6_with_calculation
resistivity, power, exam ee1 ws2022

Exercise E3 Temperature-dependent Resistance
(written test, approx. 6 % of a 60-minute written test, WS2022)

2. Additionally, explain 2 Gibbs factors sensitive in a refrigeration system. Thus the thermistor resistance between 10 ~\rm{k}\Omega and 25 ~°\rm{C}$.
Its temperature coefficients are: $\alpha=0.01 ~{{1}\over{\rm{K}}}$ and $\beta=71 \cdot 10^{-6}~{{1}\over{\rm{K}^2}}$
The temperature inside the refrigeration system can reach down to $-40 ~°\rm{C}$.

1. Calculate the resistance of the thermistor at $-40 ~°\rm{C}$.

Result

\begin{align*} R &= 6.5 ~\rm{k}\Omega \\ \end{align*}

Solution

The power of the resistor $P = U \cdot I = R \cdot I^2 = {{U^2}\over{R}}$ is equivalent to the heat flow.
Therefore, a resistive sensor might heat up the refrigeration system.
Therefore, with constant U and increasing R the power decreases. Ten times more resistance decreases the heat flow to one-tenth.

\begin{align*} R &= R_0 \cdot (1 + \alpha \cdot \Delta T + \beta \cdot \Delta T^2) && | \text{with } \Delta T = T_{\rm end} - T_{\rm start}\\ R &= 10 ~\rm{k}\Omega \cdot \left(1 + 0.01 ~{{1}\over{\rm{K}}} \cdot (-40~°\rm{C} - 25~°\rm{C}) + 71 \cdot 10^{-6}~{{1}\over{\rm{K}^2}} \cdot (-40~°\rm{C} - 25~°\rm{C})^2 \right) \\ \end{align*}

electrical_engineering_and_electronics:task_70jjg4yzznocarsq_with_calculation
temperature dependent resistance, power, heat, exam ee1 ws2022

Exercise E1 Pure Resistor Network Simplification
(written test, approx. 13 % of a 60-minute written test, WS2022)

2. The following circuit with $R_1=200 ~\Omega$, $R_2=R_3=100 ~\Omega$ and the switch S is given.
Result

Solution

\begin{align*} R_{\rm eq} &= 145.8 ~\Omega \\ \end{align*}

Now a wye-delta transformation is necessary.

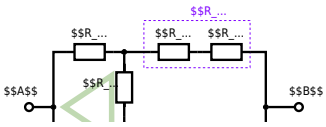

Since $R_2=R_3$ and based on the equations for the transformation, the transformed R_Y is given as: \begin{align*} R_{Y} &= {{R_2 \cdot R_2}\over{R_2 + R_2 + R_2}} \\ &= {{(100 ~\Omega)^2}\over{3 \cdot 100 ~\Omega}} \\ &= {{1}\over{3}} \cdot 100 ~\Omega = 33.33 ~\Omega \end{align*}

The equivalent resistor is given by a parallel configuration of resistors in series: \begin{align*} R_{\rm eq} &= R_Y + (R_Y + R_1 + R_1)||(R_Y + R_2)\\ R_{\rm eq} &= 33.33 ~\Omega + (33.33 ~\Omega + 400 ~\Omega)||(33.33 ~\Omega + 100 ~\Omega)\\ \end{align*}

1. The switch shall now be open. Calculate the equivalent resistance $R_{\rm eq}$ between $\rm A$ and $\rm B$.

Solution

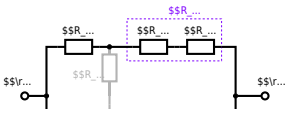

The equivalent resistor is given by a parallel configuration of resistors in series: \begin{align*} R_{\rm eq} &= (R_2 + R_1 + R_1)||(R_2 + R_2)\\ R_{\rm eq} &= (100 ~\Omega + 200 ~\Omega + 200 ~\Omega)&&||(100 ~\Omega + 100 ~\Omega) &&\\ R_{\rm eq} &= (500 ~\Omega)&&||(200 ~\Omega)&&\\ R_{\rm eq} &= {{500 ~\Omega \cdot 200 ~\Omega }\over{500 ~\Omega + 200 ~\Omega}}&&\\ \end{align*}

electrical_engineering_and_electronics:task_x357drkaqv84jnsc_with_calculation
network simplification, exam ee1 ws2022

Exercise E2 Equivalent linear Source
(written test, approx. 14 % of a 60-minute written test, WS2022)

The circuit in the following has to be simplified.
Result

\begin{align*} U_{\rm s} &= U_{\rm AB} &&= 4.5 ~\rm{V}\\ R_{\rm i} &= R_{\rm AB} &&= 6 ~\Omega \end{align*}

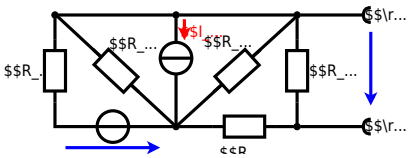

Calculated the internal resistance $R_\rm i$ and the source voltage $U_\rm s$ of an equivalent linear voltage source on the connectors $\rm A$ and $\rm B$. \begin{align*} R_1=5.0 ~\Omega, && U_2=6.0 ~\rm{V}, && R_3= 10 ~\Omega, \\ I_4=4.2 ~\rm{A}, && R_5=10 ~\Omega , && R_6=7.5 ~\Omega, \\ R_7=15 ~\Omega && && \end{align*} Use equivalent sources in order to simplify the circuit!

Solution

The best thing is to re-think the wiring like rubber bands and adjust them:

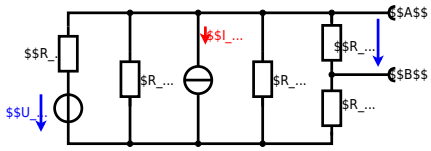

The linear voltage source of U_2 and R_1 can be transformed into a current source $I_2={{U_2}\over{R_1}}$ and R_1:

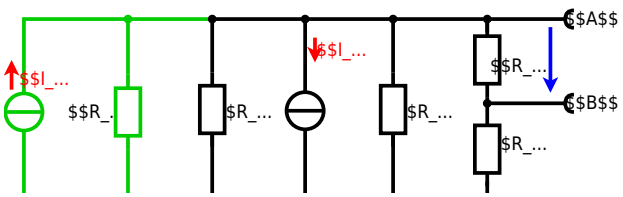

Now a lot of them can be combined. The resistors R_1, R_3, R_5 are in

parallel, like also I_2 and I_4: \begin{align*} R_{135} &= R_1||R_3||R_5\\ I_{24} &= I_2 - I_4 = {{U_2}\over{R_1}} - I_4 \end{align*} The resulting circuit can again be transformed:

Here, the U_{24} is calculated by I_{24} as the following: \begin{align*} U_{24} &= R_{135} \cdot I_{24} \\ &= ({{U_2}\over{R_1}} - I_4) \cdot R_1||R_3||R_5 \end{align*}

On the right side of the last circuit, there is a voltage divider given by R_{135}, R_6, and R_7.
Therefore the voltage between A and B is given as: \begin{align*} U_{\rm AB} &= U_{24} \cdot {{R_7}\over{R_6 + R_7 + R_1||R_3||R_5}} \\ &= ({{U_2}\over{R_1}} - I_4) \cdot {{R_7 \cdot R_1||R_3||R_5}\over{R_6 + R_7 + R_1||R_3||R_5}} \\ \end{align*}

For the internal resistance R_i the ideal voltage source is substituted by its resistance ($=0\Omega$, so a short-circuit): \begin{align*} R_{\rm AB} &= R_7 || (R_6 + R_1||R_3||R_5) \\ \end{align*}

with $R_1||R_3||R_5 = 5 ~\Omega || 10 ~\Omega || 10 ~\Omega = 5 ~\Omega || 5 ~\Omega = 2.5 ~\Omega$:

\begin{align*} U_{\rm AB} &= ({{6.0 ~\rm{V}}\over{5.0 ~\Omega}} - 4.2 ~\Omega) \cdot {{15 ~\Omega \cdot 2.5 ~\Omega}\over{7.5 ~\Omega + 15 ~\Omega + 2.5 ~\Omega}} \\ R_{\rm AB} &= 15 ~\Omega|| (7.5 ~\Omega + 2.5 ~\Omega) \\ \end{align*}

electrical_engineering_and_electronics:task_6tqttque1e2nf2c7_with_calculation
dc network analysis, pure resistor network simplification, delta wye transformation, exam ee1 ws2022

Exercise E1 Charging Capacitors
(written test, approx. 16 % of a 60-minute written test, WS2022)

4. Exp[illegible] is [illegible] open). The voltage across the capacitor is again $0 ~\rm{V}$ at the moment $t_0=0 ~\rm{s}$ when the switch S_1 is closed. Calculate the voltage $u_c (t_2)$ across the capacitor at $t_2=1 ~\rm{ms}$ after closing the switch.

Hint: To solve this, first create an equivalent linear voltage source from U, R_1, and $R_\rm B$.

Solution

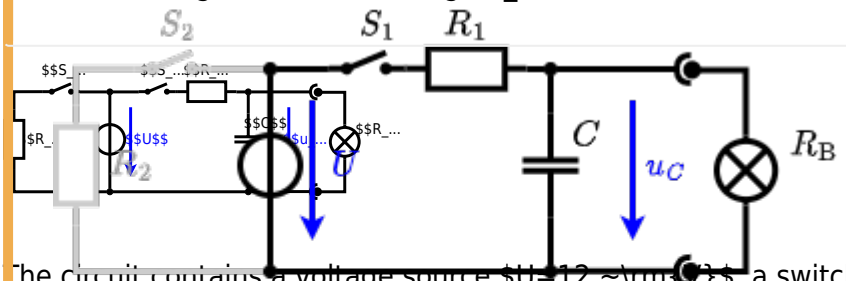

The circuit contains a voltage source $U=12 ~\rm{V}$, a switch S_1, a resistor of $R_1=20 ~\Omega$ and a capacitor of $C=100 ~\rm{µF}$.
The switch S_2 to an additional consumer R_2 will be considered to be open for the first tasks. At the moment $t_0=0 ~\rm{s}$ the switch S_1 is closed, the voltage across the capacitor is $u_c (t_0)=0 ~\rm{V}$.

1. First do not consider the light bulb – it is not connected to the RC circuit.
Calculate the point of time t_1 when $u_c (t_1)=0.5\cdot U$.

Solution

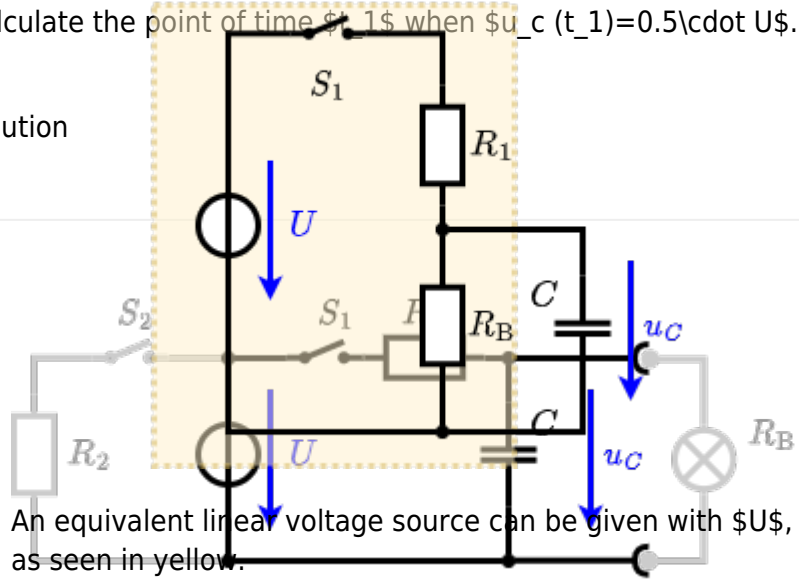

An equivalent linear voltage source can be given with U, R_1, and $R_\rm B$ as seen in yellow.
Therefore, the voltage of the equivalent linear voltage source is $U_s = U \cdot {{R_\rm B}\over{R_1 + R_\rm B}} = 1/2 \cdot U$ The internal resistance is given by substituting the ideal voltage source with its resistance ($=0 ~\Omega$, short-circuit). $$\begin{align*} R_i &= R_1 || R_\rm B \\ &= 10 ~\Omega \end{align*}$$ It has to be rearranged to t $$\begin{align*} (1- e^{t/\tau}) &= 0.5 \\ e^{t/\tau} &= 0.5 \\ t/\tau &= \ln(0.5) \\ t &= \tau \cdot \ln(0.5) \\ t &= R_1 \cdot C \cdot \ln(0.5) \end{align*}$$ $$\begin{align*} u_c(t_2) &= U_s \cdot (1- e^{t_2/(R_i\cdot C)}) \\ &=

{{1}\over{2}} \cdot U \cdot (1- e^{1~\rm{ms}/(10 ~\Omega \cdot 100 ~\rm{µF})}) \end{align*}

electrical_engineering_and_electronics:task_tb6pi8dgh0m2e2pw_with_calculation
charging capacitors, dc network analysis, pure resistor network simplification, delta wye transformation, exam ee1 ws2022

Exercise E1 Analyzing complex Impedances
(written test, approx. 14 % of a 60-minute written test, WS2022)

A. Calculate the phase angle φ_i of the two components.
B. Calculate the physical values of the two components.
C. Calculate the complex voltage $\underline{U}$ and the current $\underline{I}$ through the two components.
D. Calculate the complex impedance $\underline{Z}$ of the two components.
E. Calculate the frequency f at which the impedance of the two components is purely real.
F. Calculate the complex impedance $\underline{Z}$ at the frequency f in polar coordinates.

Result

(R and $\underline{X}_1$) shall be given.

After analysis, the following information shall be in a way that was extracted and written in

Solution

1. Calculate the physical values of the two components.

Solution

The current and voltage are in phase once there is only a pure ohmic (= pure real) resulting impedance $\underline{Z} + \underline{X}_2$.

Therefore, the component must be a capacitor with the same absolute value of impedance: $\underline{X}_C = \underline{X}_L$ $\begin{align*} X_C &= {{1}\over{\omega \cdot C}} = X_L = \omega \cdot L \\ &= {{1}\over{2\pi \cdot 300 ~\rm{Hz}} \cdot 4.68 ~\Omega}} \\ \end{align*}

The absolute value $|\underline{I}|$ can be calculated as $\begin{align*} |\underline{I}| &= {|\underline{U}|}\over{|\underline{Z}|}} \\ &= {{50 ~\rm{V}}\over{| 0.24 ~\Omega + {\rm j} \cdot 4.68 ~\Omega |}} \\ &= {{50 ~\rm{V}}\over{\sqrt{ (0.24 ~\Omega)^2 + (4.68 ~\Omega)^2 }}} \\ \end{align*}

With the complex part comes the physical value: $\begin{align*} X_L &= \omega L \\ &= {{X_L}\over{2\pi \cdot f}} \\ &= {{4.68 ~\Omega}\over{2\pi \cdot 300 ~\rm{Hz}}} \\ \end{align*}

The phase φ_i can be calculated as $\begin{align*} \varphi_i &= \arctan \left({{\rm{Im}()}\over{\rm{Re}()}} \right) \\ &= \arctan \left({{-4.68 ~\Omega}\over{0.24 ~\Omega}} \right) \\ \end{align*}

electrical_engineering_and_electronics:task_jti0uzudcmg4u22t_with_calculation
complex impedance, exam ee1 ws2022

Exercise E9 Impedances at different Frequencies

(written test, approx. 18 % of a 60-minute written test, WS2022)

2. A RC parallel circuit with $R=47 ~\Omega$ and $C=4.7 ~{\rm nF}$ is connected to a voltage source $U_{3S}=1.3 ~{\rm V}$ with $f=200 ~{\rm kHz}$. Calculate the current I_{3R} through R_3.

Result: $I_{3R}=160 ~{\rm mA}$.

1. A resistor R_1 shall have the same absolute value of the impedance as a capacitor $C_1=40 ~{\rm nF}$ at $f_1=4 ~{\rm MHz}$.

Solution

Solution

Solution

A series circuit means that the current is constant on every component.

Parallel circuit means that the voltage is the same on R_3 and C_3.

Since $\underline{U}$ is perpendicular to $\underline{I}_{3C}$ (It has to, since R_3 is perpendicular to ${\rm i}\cdot {X}_{3C}$, too).

Therefore, the resulting current of the parallel circuit is given as: \begin{align*} \underline{I}_{3} &= \underline{I}_{3R} + \underline{I}_{3C} \\ |\underline{I}_{3}|^2 &= |\underline{I}_{3R}|^2 + |\underline{I}_{3C}|^2 \\ |\underline{I}_{3}| &= \sqrt{|\underline{I}_{3R}|^2 + |\underline{I}_{3C}|^2} \end{align*}

Back to the first formula: \begin{align*} R_3 \cdot {I}_{3R} &= {X}_{3C} \cdot {I}_{3C} \\ R_3 &= {X}_{3C} \cdot {{{I}_{3C}}\over{{I}_{3R}}} \\ &= {{1}\over{2\pi \cdot f \cdot C_3}} \cdot {{\sqrt{|{I}_{3}|^2 - |{I}_{3R}|^2}}\over{{I}_{3R}}} \\ \end{align*}

electrical_engineering_and_electronics:task_pdkggtyexxy1ktu3_with_calculation
complex impedance, exam ee1 ws2022

Exercise E1 Complex Impedance Circuit
(written test, approx. 15 % of a 60-minute written test, WS2022)

4. Calculate the complex impedance $\underline{Z}$ and its amplitude Z and phase φ_Z.

Result: $\underline{Z}=19.8 ~\Omega - {\rm j} \cdot 107.31 ~\Omega$ and $Z=109.1 ~\Omega$.

3. Draw the circuit diagram of the given circuit.

Label all components, voltages, and currents.

Result:

With $k = {{1}\over{\sqrt{2}}}\cdot\hat{I}$: \begin{align*} &= {{1}\over{\sqrt{2}}}\cdot {{\hat{U}}\over{Z}} \\ &= {{1}\over{\sqrt{2}}}\cdot {{3.0 ~{\rm V}}\over{19.28 ~\Omega}} \\

1. A linear source with a voltage of $u(t) = 3.0 ~{\rm V} \cdot \sin(2\pi \cdot 15 ~{\rm kHz} \cdot t)$ is to be analyzed. Choose a proper time scaling factor and state it.

Solution

This linear source is connected with an inductor of $330 ~{\rm µH}$ and a capacitor of $0.22 ~{\rm µF}$, all in series.

Result

\begin{align*} Z_L &= 2\pi \cdot f \cdot L \\ &= 2\pi \cdot 15 ~{\rm kHz} \cdot 0.22 ~{\rm µF} \end{align*}

\begin{align*} Z_L &= 2\pi \cdot f \cdot L \\ &= 2\pi \cdot 15 ~{\rm kHz} \cdot 330 ~{\rm µH} \end{align*}

\begin{align*} Z &= {{\hat{U}}\over{\hat{I}}} \\ \hat{I} &= {{\hat{U}}\over{Z}} \\ &= {{1}\over{2\pi \cdot f \cdot C}} \\ &= {{1}\over{2\pi \cdot 15 ~{\rm kHz} \cdot 0.22 ~{\rm µF}}} \end{align*}

\begin{align*} Z &= R + {\rm j} \cdot \omega L - {\rm j} \cdot {{1}\over{\omega C}} \\ &= R + {\rm j} \cdot \left(\omega L - {{1}\over{\omega C}} \right) \end{align*}

\begin{align*} \underline{U} &= R \cdot \underline{I} + {\rm j} \cdot \omega L \cdot \underline{I} - {\rm j} \cdot {{1}\over{\omega C}} \cdot \underline{I} \\ &= R \cdot \underline{I} + {\rm j} \cdot \left(\omega L - {{1}\over{\omega C}} \right) \cdot \underline{I} \end{align*}

\begin{align*} \underline{U}_{R} &= R \cdot \underline{I} \\ \underline{U}_{L} &= {\rm j} \cdot \omega L \cdot \underline{I} \\ \underline{U}_{C} &= - {\rm j} \cdot {{1}\over{\omega C}} \cdot \underline{I} \end{align*}

\begin{align*} \underline{U} &= \underline{U}_{R} + \underline{U}_{L} + \underline{U}_{C} \end{align*}

\begin{align*} |\underline{U}|^2 &= |\underline{U}_{R}|^2 + |\underline{U}_{L} + \underline{U}_{C}|^2 \\ |\underline{U}|^2 &= |\underline{U}_{R}|^2 + |\underline{U}_{L}|^2 + |\underline{U}_{C}|^2 \\ \left({{\underline{U}}\over{\underline{I}}} \right)^2 &= |R|^2 + |{\rm j} \cdot \omega L|^2 + |-{\rm j} \cdot {{1}\over{\omega C}}|^2 \\ \left({{\underline{U}}\over{\underline{I}}} \right)^2 &= R^2 + \left(\omega L - {{1}\over{\omega C}} \right)^2 \end{align*}

\begin{align*} Z &= \sqrt{R^2 + \left(\omega L - {{1}\over{\omega C}} \right)^2} \\ Z &= \sqrt{R^2 + \left(2\pi \cdot f \cdot L - {{1}\over{2\pi \cdot f \cdot C}} \right)^2} \end{align*}

\begin{align*} \varphi_Z &= \arctan\left({{\omega L - {{1}\over{\omega C}}}\over{R}} \right) \\ \varphi_Z &= \arctan\left({{2\pi \cdot f \cdot L - {{1}\over{2\pi \cdot f \cdot C}}}\over{R}} \right) \end{align*}

\begin{align*} \underline{Z} &= R + {\rm j} \cdot \left(\omega L - {{1}\over{\omega C}} \right) \\ \underline{Z} &= R + {\rm j} \cdot \left(2\pi \cdot f \cdot L - {{1}\over{2\pi \cdot f \cdot C}} \right) \end{align*}

\begin{align*} \underline{Z} &= 19.8 ~\Omega - {\rm j} \cdot 107.31 ~\Omega \\ Z &= \sqrt{19.8^2 + 107.31^2} ~\Omega \\ Z &= 109.1 ~\Omega \end{align*}

\begin{align*} \varphi_Z &= \arctan\left({{-107.31}\over{19.8}} \right) \\ \varphi_Z &= -79.5^\circ \end{align*}

\begin{align*} \underline{Z} &= 19.8 ~\Omega - {\rm j} \cdot 107.31 ~\Omega \\ Z &= 109.1 ~\Omega \\ \varphi_Z &= -79.5^\circ \end{align*}

\begin{align*} \underline{Z} &= 19.8 ~\Omega - {\rm j} \cdot \left(2\pi \cdot 15 ~{\rm kHz} \cdot 0.22 ~{\rm µF} - {{1}\over{2\pi \cdot 15 ~{\rm kHz} \cdot 330 ~{\rm µH}}} \right) \\ \underline{Z} &= 19.8 ~\Omega - {\rm j} \cdot 48.2 ~\Omega \\ Z &= 52.1 ~\Omega \\ \varphi_Z &= -67.7^\circ \end{align*}

$$\begin{align*} Z_C &= {{1}\over{2\pi \cdot f \cdot C}}\\ &= {{1}\over{2\pi \cdot 15 ~{\rm kHz} \cdot 330 ~{\rm µH}}}\\ \end{align*}$$

$$\begin{align*} \underline{Z} &= R + \underline{Z}_L + \underline{Z}_C \\ &= R + j \cdot {Z}_L - j \cdot {Z}_C \\ &= R + j \cdot ({Z}_L - {Z}_C) \\ |\underline{Z}| &= \sqrt{R^2 + (\underline{Z}_L - \underline{Z}_C)^2 }\\ \end{align*}$$

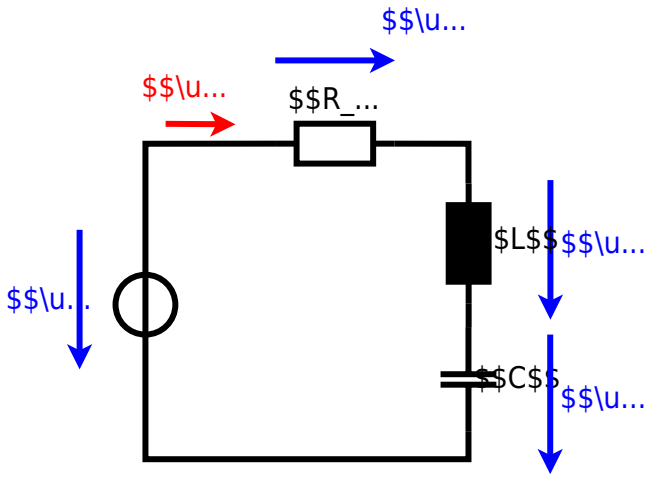
$$\u...
$$\u...
$$R_...
$L$$
$$\u...
$$\u...
$$C$$
$$\u...

electrical_engineering_and_electronics:task_kricv9fh7haauo6q_with_calculation
complex impedance, exam ee1 ws2022

From:
https://wiki.mexle.org/ - **MEXLE Wiki**

Permanent link:
https://wiki.mexle.org/electrical_engineering_and_electronics_1/ws2022_exam

Last update: **2026/01/12 00:24**